Servo pillar CPSM

The first telescopic pillar with servo-power for industrial applications

High load capability

High speed capability

Virtually maintenance free

Telescopic pillars CPSM are the ideal solution to combine strong guiding functions with linear movements.

The robust, manually adjusted and virtually backlash-free aluminum extrusions are able to carry high excentric loads in push and pull directions.

To provide enough power to lift and lower heavy weights with high speed, the pillars are equipped with brushless DC or servo motors. Of course, SKF also supports the usage of preferred motors with a customizable motor interface.

Optional brakes and damping elements are key features that allow an effective usage in heavy duty industrial applications.

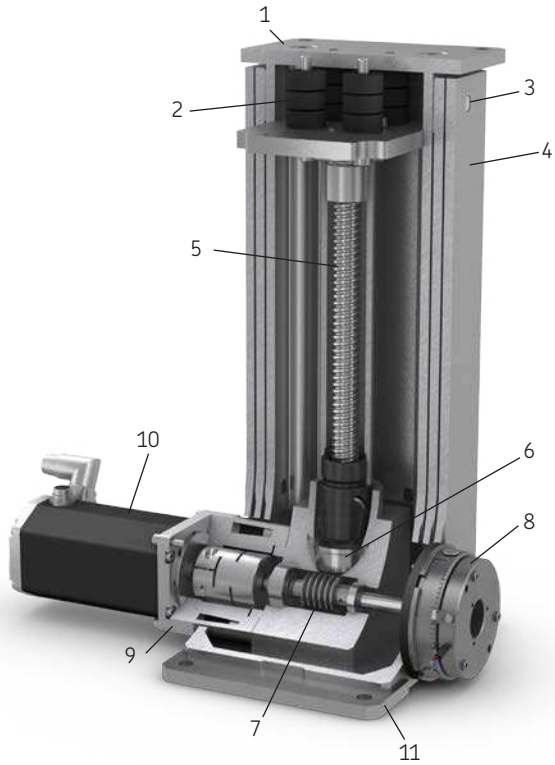

Design

1 Customized top plate
2 Optional damping system
3 Backlash-free long lasting guiding pads
4 2 or 3 section extruded aluminum guiding tubes
5 High efficiency ball screw
6 Preloaded bearing arrangement
7 Low friction worm gear reduction
8 Optional electromechanical brake
9 Standard or customized motor interface
10 Motor (Brushless DC or servo AC)
11 Customized bottom plate

Features and benefits

- High dynamic servo or brushless DC motor for high speed up to 100 mm/s
- High performance ball screw for high load capacity up to 5 kN
- Extruded alumium profiles for a very robust design
- Manually adjusted gliders for very high stiffness and high excentric loads
- Encoder system of the motor and high quality gearbox enable high positioning accuracy and high repeatability (0,1 mm)
- High nominal power of the motor allows for high duty cycle of the pillar
- Customized motor adapter for highest flexibility (max. motor diameter 90 mm)
- Customized top and bottom plate to fit most of the applications
- Customized aluminum profile colour (anodized) to fit application design needs
- Optional brake to release the motor when it's in position and to increase the duty cycle
- Preloaded bearing arrangement also for ceiling mount applications (only available without damping system)

The optional damping system protects the inner parts of the servo pillar in case of hard impacts. This might be helpful for applications where goods are loaded on the top of the pillar and could create high peak loads.

With this option, the retracted length increases by 65 mm.

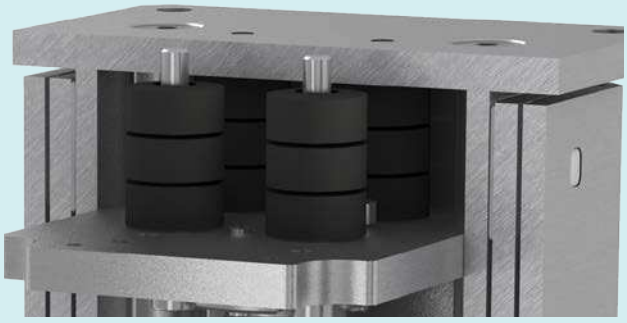

Technical data	Symbol	Unit	w/o motor	BG75	1FK7034
Performance data					
Continuous force at zero speed	F_{C0}	kN	5	4,013	5,000
Continuous force at max. speed	F_C	kN	5	4,013	4,013
Peak force at zero speed	F_{P0}	kN	5	5	5
Peak force at max. speed	F_P	kN	5	5	5
Dynamic load capacity	C	kN	21	21	21
Holding force (motorbrake option)	F_{Hold}	kN	N/A	0,365	0,365
Max. linear speed	V_{max}	mm/s		62	100
Max. acceleration	a_{max}	m/s^2	6	6	6
Duty cycle	D	%	100	100	100
Mechanical data					
Screw type	–	–	Ball screw	Ball screw	Ball screw
Screw diameter	d_{screw}	mm	20	20	20
Screw lead	p_{screw}	mm	10	10	10
Lead accuracy			G7	G7	G7
Stroke (100 mm steps)	s	mm	100...700	100...700	100...700
Internal overstroke each side	s_0	mm	1	1	1
Backlash	$s_{backlash}$	mm	0,07	0,07	0,07
Gear reduction	i		10	10	10
Efficiency	η	%	58	52	51
Weight at 0 mm stroke	m	kg			
Δ weight per 100 mm	Δ m	kg			
Weight of optional brake	m_{brake}	kg	N/A	0,5	0,4
Electric data					
Motor type			N/A	Brushless DC	Servo
Nominal voltage	U	V DC	N/A	40	600
Nominal current	I	A	N/A	12,7	1,3
Peak current	I_{peak}	A	N/A	10,8	1,9
Nominal power	P	kW	N/A	0,45	0,6
Environment					
Ambient temperature	$T_{ambient}$	°C	0...+50	0...+50	0...+50
Max. humidity	φ	%	95	95	95

For more information about the motors, please refer to the *High performance actuator catalogue* on skf.com, section CASM 32 – 63

Adapter for third-party motors

In order to attach your preferred motor to the pillar, SKF offers tailor-made solutions within the specifications below. For motor specifications which are not covered by those below, please contact SKF.

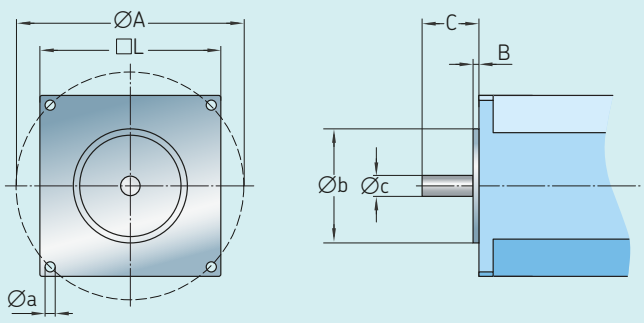

	Symbol	Unit	Min.	Max.
Motor housing	□L	mm	60	95
Motor centering	∅b	mm	47	95
Centering height	B	mm	1	5
Fixing diameter	∅A	mm	52	103
Shaft diameter	∅c	mm	11	19
Shaft length	C	mm	15	48

Dimensional drawings

CPSM pillar, 3-section, no brake, no damping system

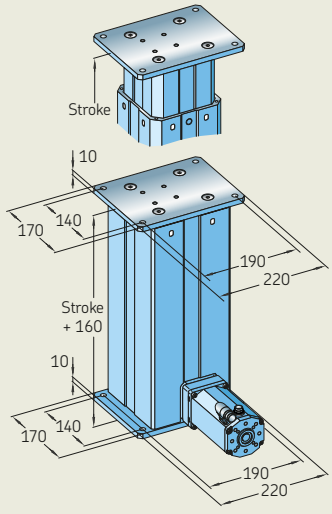

Performance diagrams

Bending load diagram 2 sections

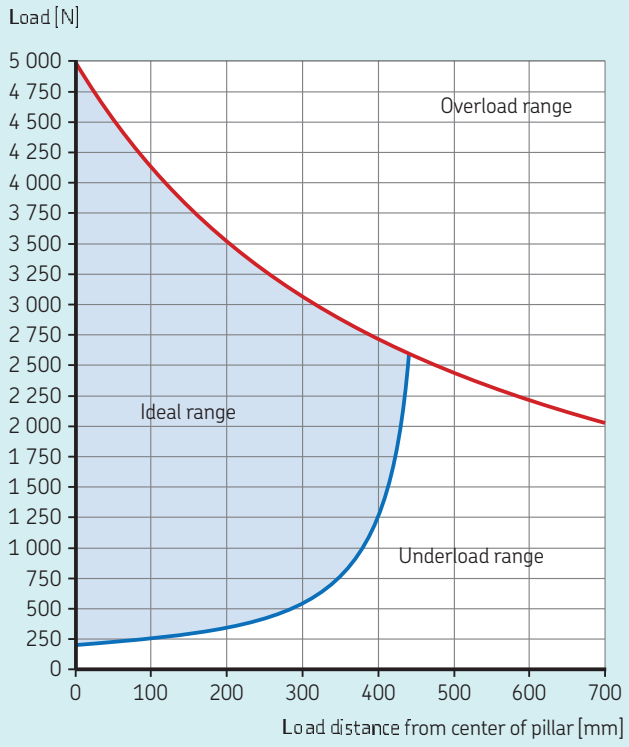

Output speed

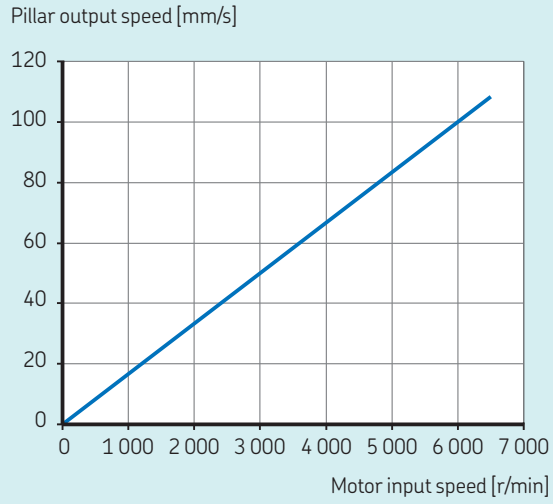

Bending loads diagram 3 sections

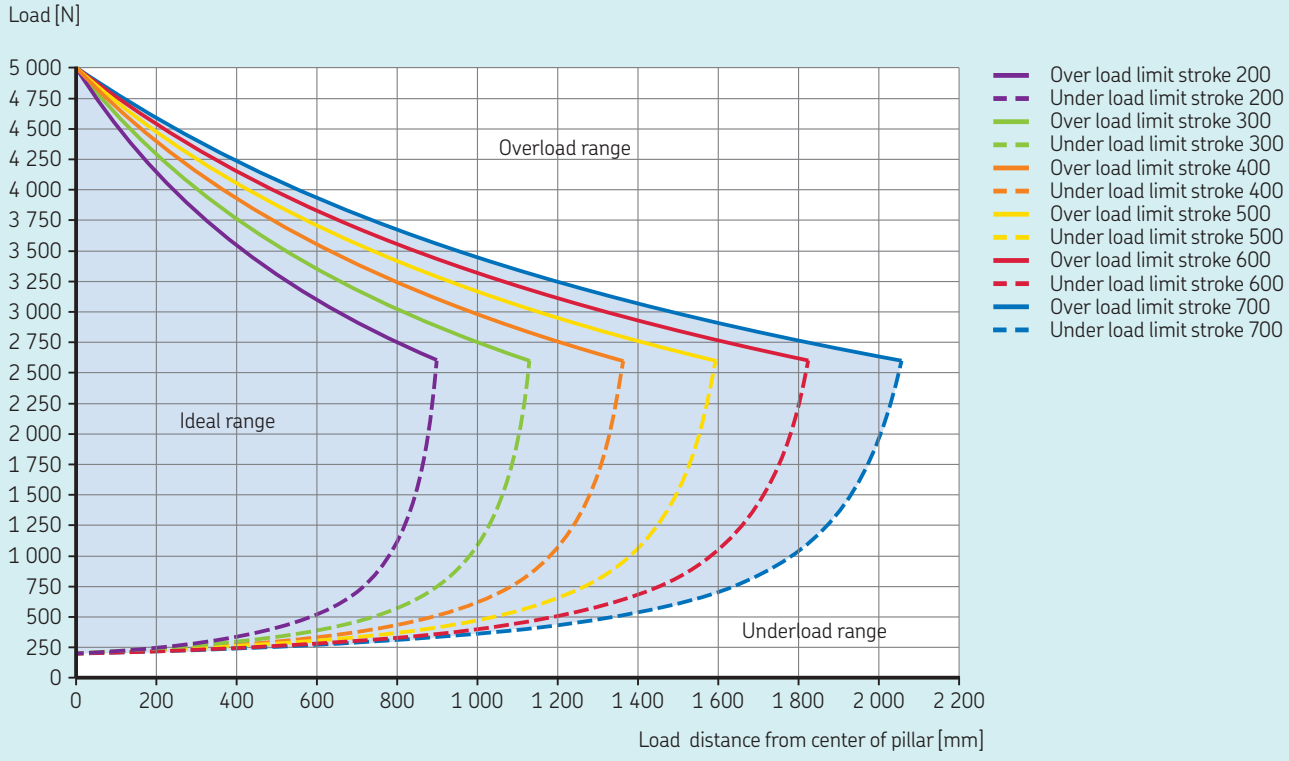

Optimized for your application

Factory automation – sorting, diverting

Industrial processing lines require constant dynamic positioning to manage and sort different types and sizes of products.

CPSM servo pillars represent an innovative solution to easily realize sorting stations in an effective way.

By combining the actuation function with the linear movement guidance, customers can realize the lifting function simplifying the mechanical construction, reducing also the design and assembly time.

The compactness of the pillar also ensures a minimized footprint in the machine, resulting in a smaller processing line.

Last, but not least, the in-built mechanical and electrical connections allow plug and play installation and removal, simplifying the future maintenance operation at the end user sites.

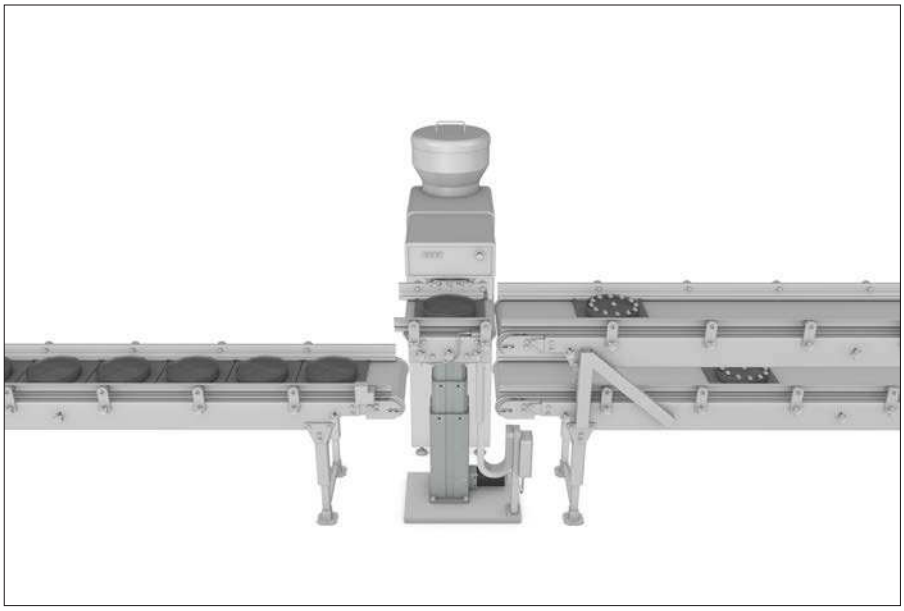

Factory automation – automotive

The high controllability and robust construction make a CPSM pillar the ideal solution for realizing a smart chassis levelling function in automotive car transfer units.

The need of handling different types of car chassis on the same line requires a flexible system setup that allows a quick resetting with precise positioning.

The optional integrated dampening system protects the pillar from mechanical shocks during the loading and unloading phases, ensuring high reliability and longer lifetime in operation.

The usage of customer-defined servo motors allows for easier integration into the control network, reducing the commissioning time of the transfer unit.

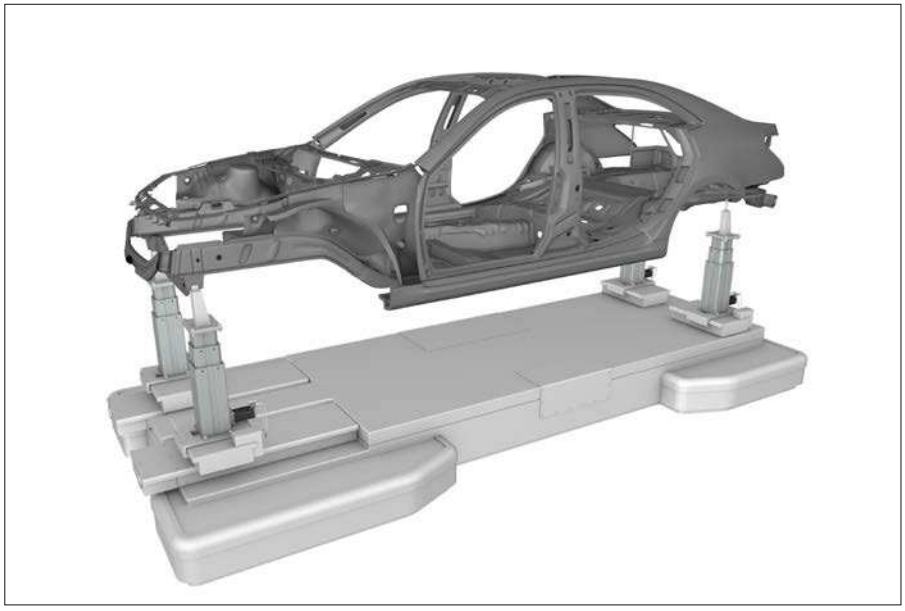

Packaging – pick and place

Fully automatized pick and play solutions are becoming a new standard with packaging stations. The main challenge for packaging system manufacturers is to complete multi-axes systems in a simple and cost effective way, while still delivering the required performance. CPSM servo pillars represent an effective solution to complete vertical axis regulation in a smart way, thanks to its ability to move heavy excentric loads with a high duty cycle operation.

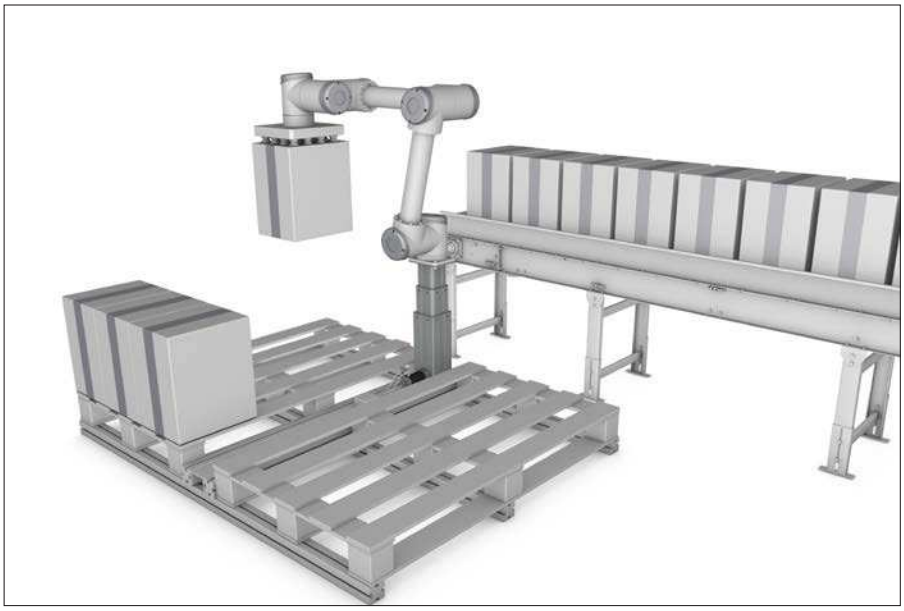

skf.com

PUB MT/P2 17504 EN · July 2017