www.lmotion.ru sales@lmotion.ru Тел.: +7(499) 703-39-74

EWELLIX
MAKERS IN MOTION

Telescopic pillar CPMT

- Low retracted height
- High stroke
- High load capacity
- High safety and reliability
- Design flexibility

Standards
IEC 60601-1:2005
ANSI/AAMI ES60601-1:2005
IEC 60601-1-2:2007

CPMT

For medical procedure equipment

Benefits

- Low retracted height
- High stroke
- High load capacity
- High safety and reliability
- Design flexibility

Standards

- IEC 60601-1:2005
- ANSI/AAMI ES60601-1:2005
- IEC 60601-1-2:2007

Technical data

	Unit	CPMT1-1S	CPMT1-1M	CPMT1-2S	CPMT1-2M
Rated push load	N	5 000	5 000	6 000	6 000
Rated pull load	N	4 000	4 000	4 000	4 000
Static load (push)[1]	N	15 000	15 000	15 000	15 000
Safety factor on rated load[2]		4	4	4	4
Dynamic bending moment	Nm	up to 450[3]	up to 1 200[3]	up to 550[3]	up to 1 400[3]
Static bending moment (max.)	Nm	1 000	3 000	1 000	3 000
Retracted length	mm	stroke/2 + 120 mm	stroke/2 + 240 mm	stroke/2 + 120 mm	stroke/2 + 240 mm
Stroke (S)	mm	400 to 600	300 to 600	400 to 600	300 to 600
Speed	mm/s	14 to 34	14 to 34	12 to 26	12 to 26
Voltage	V DC	24 to 30	24 to 30	24 to 30	24 to 30
Current (push, max.)	A	12	12	10	10
Current (pull, max.)	A	10	10	7	7
Duty cycle	on/off	1 min./9 min.	1 min./9 min.	1 min./9 min.	1 min./9 min.
Ambient temperature	°C	+10 to +40	+10 to +40	+10 to +40	+10 to +40
IP protection		20	20	20	20
Weight	kg	16,5 to 20	19 to 23,5	16,5 to 20	19 to 23,5

[1] Compliant with static load according to IEC 60601-2-46:2010
[2] Static tensile safety factor to prevent mechanical hazard according to IEC 60601-1:2005
[3] For details, see offset load diagrams (↳ **page 4**)

Dimensional drawing

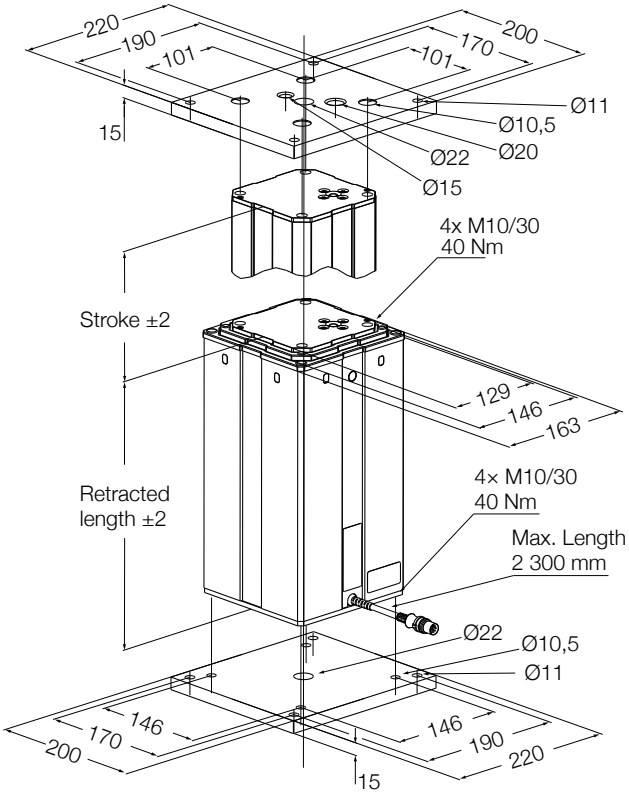

Configuration options

Option S **Option M**

DIN8 or flying leads cable for connector flexibility

Suitable control units and accessories

	Control units		
	SCU	VCU	BCU[1]
CPMT	•	•	•
Operating switches			
EHA 3	•	•	•
STJ	•	•	•
STE	•	•	•

Hand switch Foot switch Desk switch

[1] Reduced load capacity:
CPMT1-1 up to 3 000 N
CPMT1-2 up to 4 000 N

Connecting diagrams

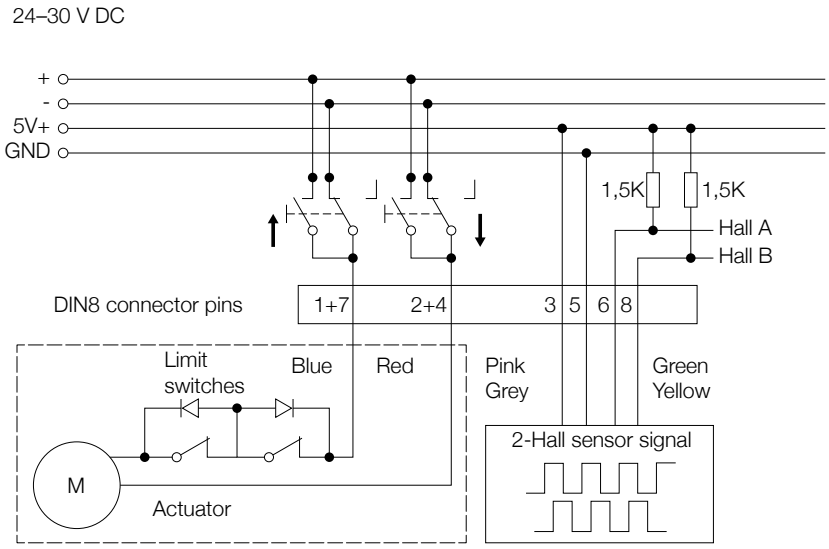

Offset load diagrams

CPMT1-1S, -2S

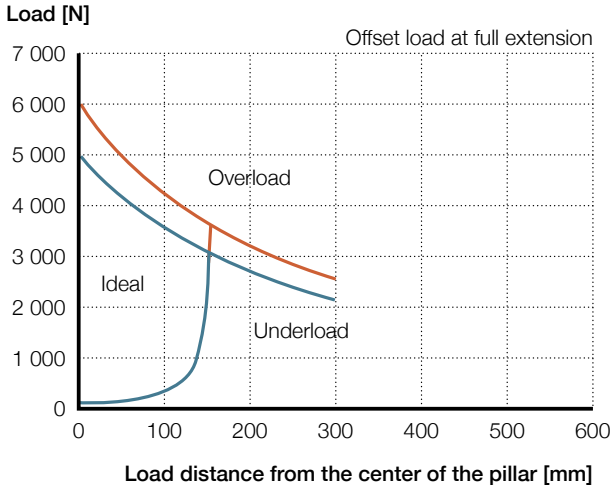

CPMT1-1M, -2M

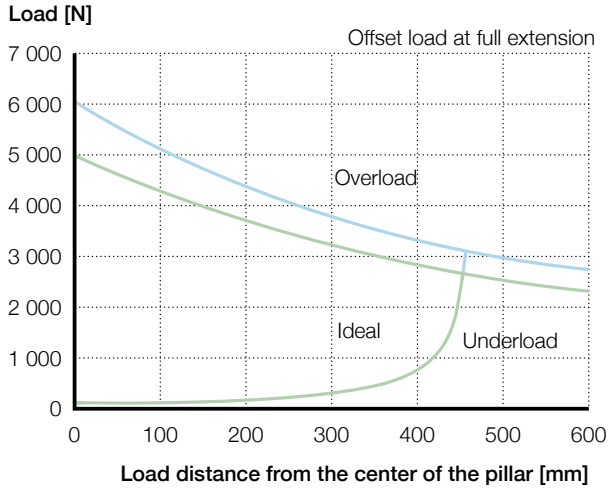

CPMT1-1S CPMT1-2S CPMT1-2M CPMT1-1M

Speed-load diagrams

CPMT1-1

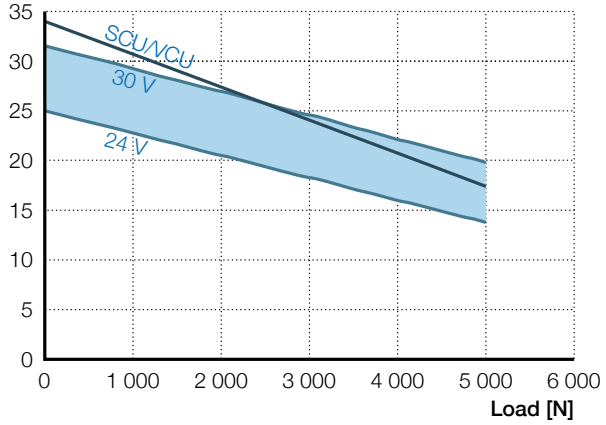

CPMT1-2

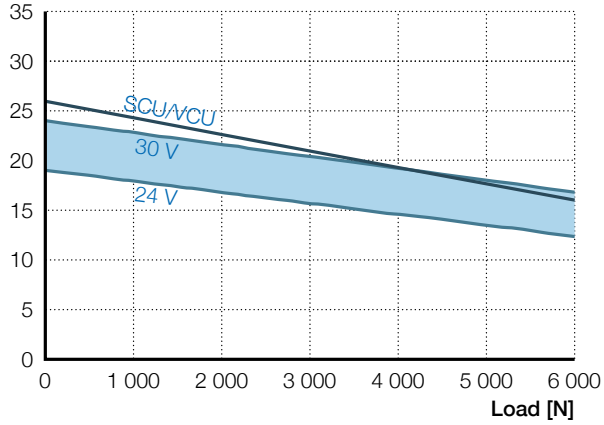

For medical procedure equipment

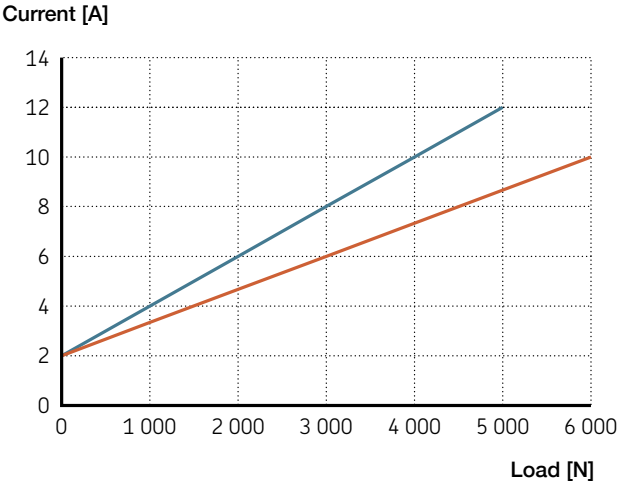

CPMT1-1

CPMT1-2

Mounting details

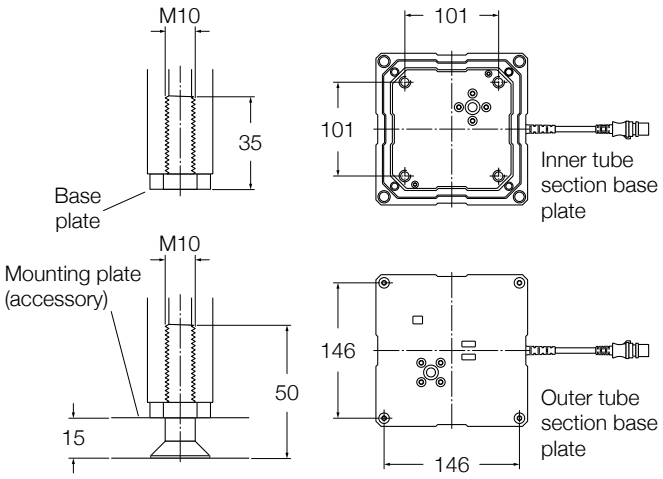

The pillar must be mounted on a plane and rigid surface by 4 screws M10 (accessory) with a screw in depth of 25 to 35 mm in the pillar.

Additional attachment options

Optional threads on outer tube section can be configured for additional attachment options. Please contact Ewellix for more details.

- Choice in size and position
- High strength to support attached actuators

Accessories

Description	Part number
Control Unit SCU (3 or 6 ports)	SCUXX-003XXX-000
Control Unit VCU (3 or 5 ports)	VCUXX-003XX0-000
Control Unit BCU (3 ports)	BCUX3-XX3100-0000
Foot switch STJ (1-3 channels)	STJ0X-XXXXXX-XX00
Hand switch EHA3 (1-5 channels)	EHA3X-23MXXN-000
Top mounting plate	ZPL-290268
Bottom mounting plate	ZPL-290265
Screw (4/plate) for mounting plate	ZBE-510707

Ordering key

C P M T 1 – ☐ ☐ 0 ☐ ☐ ☐ ☐ ☐ – 0 0 0

Type

Voltage

1 24–30 V DC

Load

	Push (N)	Pull (N)
1	5 000	4 000
2	6 000	4 000

Retracted length

S Stroke/2 + 120 mm
M Stroke/2 + 240 mm

Stroke length (mm)

300	300 mm	Only for retracted length M
350	350 mm	Only for retracted length M
400	400 mm	
450	450 mm	
500	500 mm	
550	550 mm	
600	600 mm	
---	Other	per 10 mm from 300 mm (or 400 mm for retracted length S) to 600 mm

Electrical options

F 2-Hall encoder, end limit switches

Cable options

1 1 m DIN8 cable
2 2,3 m DIN8 cable
3 2,3 m flying leads cable

■ Options shown in red are only available on request. Contact Ewellix for more information on minimum quantities and additional cost.

www.lmotion.ru sales@lmotion.ru Тел.: +7(499) 703-39-74

ewellix.com

© Ewellix
All contents of this publication are the property of Ewellix, and may not be reproduced or given to third parties (even extracts) without permission. Although great care has been taken in the production of this catalog, Ewellix does not take any responsibility for damage or other loss resulting from omissions or typographical errors. The photo may differ slightly in appearance from the actual product. Due to continuous improvements being made in our products, the product's appearance and specifications are subject to change without notice.

PUB IL-07007/1-EN-March 2020