Imotion.ru sales@Imotion.ru Тел.: +7(499) 703-39-74

EWELLIX
MAKERS IN MOTION

INSTALLATION, OPERATION AND MAINTENANCE MANUAL

CAR 22, 32, 40 CARN 32 and CCBR 32

Linear actuator

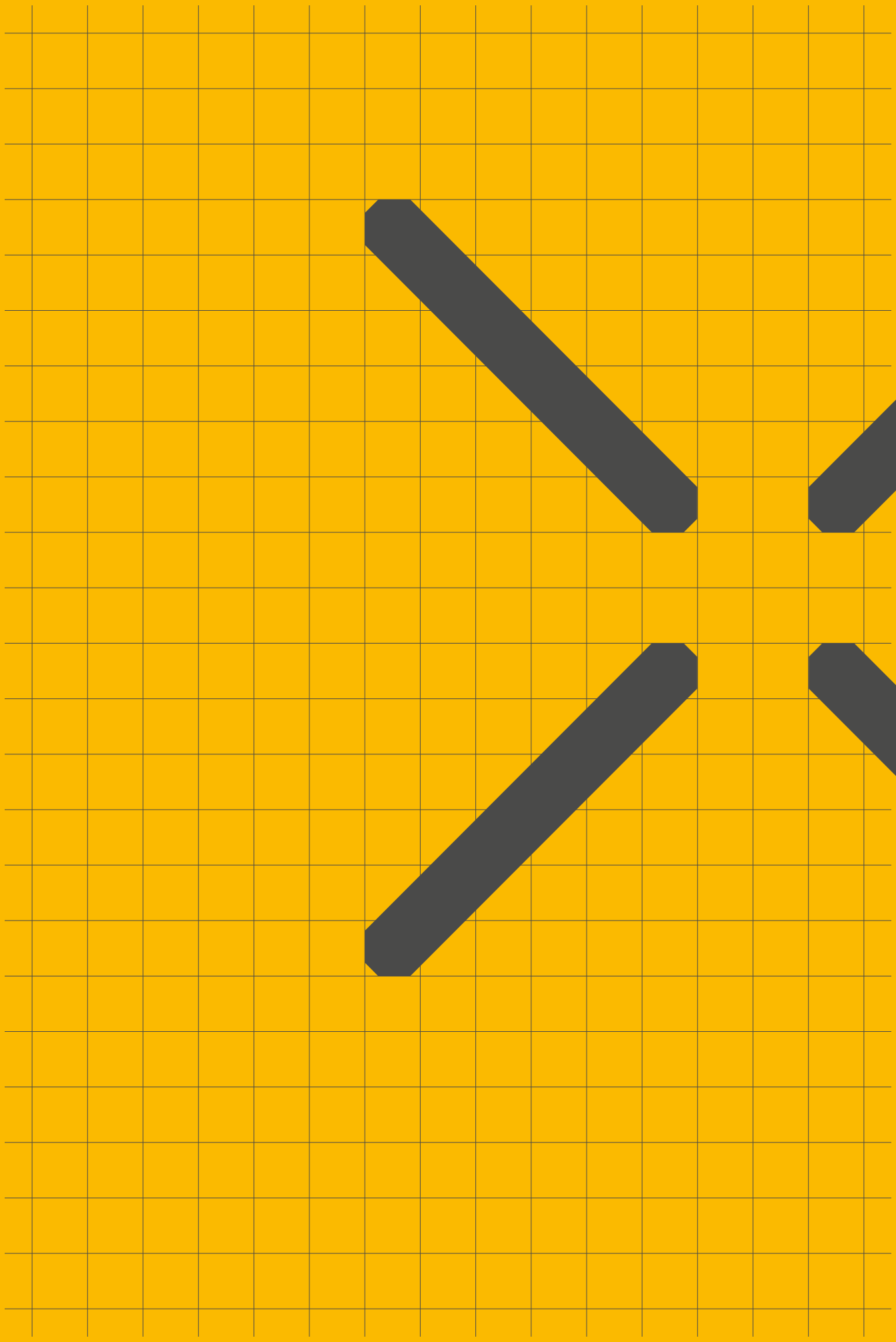

Contents

1.0 Important safety information **4**

2.0 Intended use **5**

2.1 Duty Factors 5

2.1.1 DC Versions 5

2.1.2 AC Versions 6

2.2 Requirements for correct installation 6

3.0 Available versions **7**

4.0 Optional equipment **7**

5.0 Technical data **8**

6.0 Installation **10**

7.0 Wiring Diagrams **11**

8.0 Maintenance **12**

9.0 Remaining risks **13**

10.0 Destruction/waste **13**

⚠ WARNING

Read this manual before installing, operating or maintaining this actuator. Failure to follow safety precautions and instructions could cause actuator failure and result in serious injury, death or property damage.

lmotion.ru sales@lmotion.ru Тел.: +7(499) 703-39-74

1.0 Important safety information

The actuator is assembled and delivered by Ewellix according to the ordering key. Modification of the actuator is not allowed in any way. Any modification will void the warranty and could create a safety hazard. Ewellix disclaims any and all liability or responsibility for the modified product and for any claims, demands or causes of action for damage or for personal injury resulting from modification and/or use of such product. In addition, if the actuator has been disassembled, misused or altered without prior written authorisation, warranty will be voided. These installation instructions are part of the actuator and should be kept together with all relevant documentation regarding the application in which it is used.

The following are important safety precautions that must be followed during installation:

- All electrical installation and maintenance should be carried out by qualified personnel.
- Terminate power supply to the actuator before installation or maintenance.
- Make sure that the actuator is not under load or in tension before installation or maintenance.
- Use the appropriate safety equipment when installing/repairing the actuator.
- When connecting the actuator, make sure that the power supply corresponds to what is required in the technical specifications. See section 5 below.
- When heavy load and high duty factor is used, motor and surrounding components can get hot.

lmotion.ru sales@lmotion.ru Тел.: +7(499) 703-39-74

2.0 Intended use

The actuator is designed to be used only in the following situations:

- Axial loads
- Indoor applications
- Ambient temperature range of –20 to +70 °C (–5 to +160 °F).
- Intermittent use

Actuators in the following motor ranges may only be used in an industrial environment.

- D12xxx
- D24xxx

These actuators are compliant with the emission requirements of the EMC Generic standards EN 61000-6-4, Emission for industrial environments. The user may be required to take adequate measures with respect to emissions, if the product is operated in residential, commercial and light-industrial environments according to EMC Generic standards EN-61000-6-3.

2.1 Duty Factors

Permitted load is related to the duty factor i.e. load must be reduced when the duty factor is increased.

In the diagrams maximum load is shown as a function of duty cycle. The diagrams show required capacitor size at various load and duty factor.

If the recommended duty factor is exceeded the actuator may be overheated and damaged.

Duty factor is defined as amount of time running under load vs. total cycle time.

$$\text{Duty factor \%} = \frac{N}{N + R} \times 100$$

N = running under load
R = rest period
N+R = total cycle time

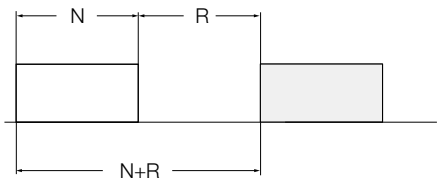

Permitted load for DC actuators at a specific duty factor is expressed in percentage of maximum dynamic load capacity, see diagram.

2.1.1 DC Versions

Actuator	Max duty factor at max dynamic load and at 20 °C (68 °F)
CAR 22	25%
CAR 32	25%
CAR 40	25%

2.1.2 AC Versions

CAR 32

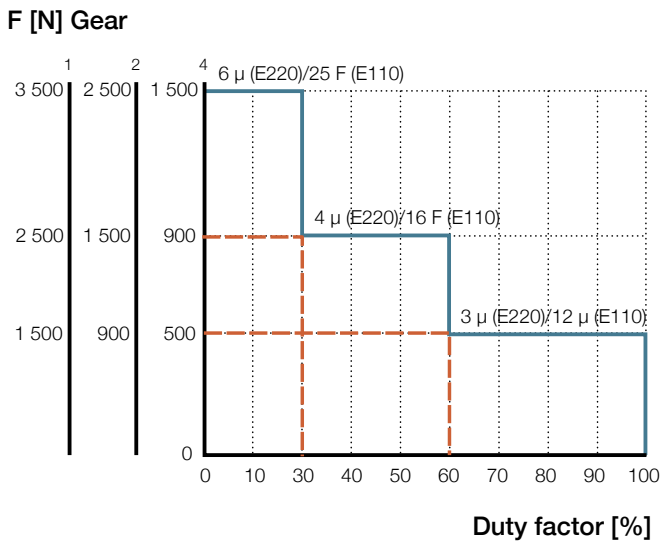

CAR 40

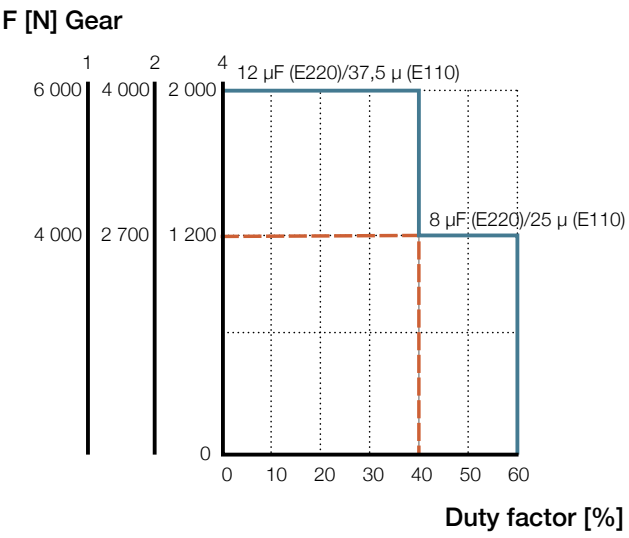

2.2 Requirements for correct installation

- Maximum angle between the actuator's attachment and the rear mounting attachment must not exceed 30°. ↳ **fig. 1**.
- The surface to which the actuator is attached must be able to withstand the force applied by the actuator.
- Ensure that the applied force on the attachments is always centered on the actuator. ↳ **fig. 2**.

⚠ WARNING

Do not exceed the actuator's load limits. Doing so can result in serious injury and/or property damage. For technical data on load limits, see section 5 below.

⚠ CAUTION

Avoid running the actuator into the mechanical end position. Repeatedly running into the mechanical end position may damage the actuator or shorten its lifespan.

Fig. 1

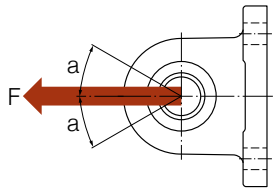

Angle α = max 30°

Fig. 2

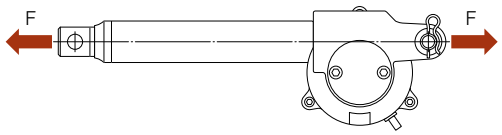

lmotion.ru sales@lmotion.ru Тел.: +7(499) 703-39-74

3.0 Available versions

CAR 40 and CAR 32 are available in the following versions:

- 120/230 VAC
- 12/24 VDC

CAR 22 is only available in the following version:

- 12/24 VDC

CARN 32 and CCBR 32 are delivered without motor.

4.0 Optional equipment

- Limit switch

More information is available on ewellix.com.

5.0 Technical data

All values for standard actuators are tested under the following conditions:

- Temperature + 20 °C (68 °F)
- Stabilized voltage
- Compression load

CAR 40

AC versions Description		Unit	–
Rated push load		N	2 000 to 6 500
Rated pull load		N	2 000 to 6 000
Speed (at full load)		mm/s	9 to 40[1]
Stroke		mm	100 to 700
Retracted length		mm	S + 263
Voltage		V AC	120 or 230
Power consumption		W	360
		W	299
Current consumption	12 V AC	A	3 (brake +0,29 A)
	24 V AC	A	1,3 (brake +0,11 A)
	24 V AC	A	
Duty cycle		%	40
Ambient temperature		°C	–20 to +70
Type of protection		IP	20/54
Weight		kg	5,8 to 8,4

[1] Depending on selected motor

DC versions Description		Unit	–
Rated push load		N	2 000 to 6 000
Rated pull load		N	2 000 to 6 000
Speed (full load to no load)		mm/s	10 to 60
Stroke		mm	100 to 700
Retracted length		mm	S + 263
Voltage		V DC	24
Power consumption	120 V DC	W	N/A
Current consumption	120 V DC	A	16
Duty cycle		%	25
Ambient temperature		°C	–20 to +70
Type of protection		IP	20/44
Weight		kg	5,8 to 8,4

CAR 32

AC versions Description		Unit	–
Rated push load		N	1 500 to 3 500
Rated pull load		N	1 500 to 3 500
Speed (at full load)		mm/s	6 to 32[1]
Stroke		mm	50 to 700
Retracted length		mm	S + 218
Voltage		V DC	120 or 230
Power consumption	120 V AC	W	98 (brake 133,2 W)
	230 V AC	W	92 (brake 117,3 W)
Current consumption	120 V AC	A	0,82 (brake + 0,29 A)
	230 V AC	A	0,4 (brake + 0,11 A)
Duty cycle		%	30
Ambient temperature		°C	–20 to +70
Type of protection		IP	20/54
Weight		kg	2,1 to 3,7

[1] Depending on selected motor

DC versions Description		Unit	–
Rated push load		N	1 000 to 3 500
Rated pull load		N	1 000 to 3 500
Speed (full load to no load)		mm/s	5 to 60
Stroke		mm	50 to 700
Retracted length		mm	S + 218
Voltage		V DC	12 or 24
Power consumption		W	N/A
Current consumption	12 V DC	A	13
	24 V DC	A	8
	24 V DC	A	5 (for motor D24CW)
Duty cycle		%	25
Ambient temperature		°C	–20 to +70
Type of protection		IP	20/44
Weight		kg	2,1 to 3,7

lmotion.ru sales@lmotion.ru Тел.: +7(499) 703-39-74

CAR 22

DC versions Description		Unit	–
Rated push load		N	1 000 to 1 500
Rated pull load		N	1 000 to 1 500
Speed (full load to no load)		mm/s	10 to 30
Stroke		mm	50 to 300
Retracted length		mm	S + 205
Voltage		V DC	12 or 24
Power consumption		W	N/A
Current consumption	12 V DC	A	9
	24 V DC	A	5
Duty cycle		%	25
Ambient temperature		°C	–20 to +70
Type of protection		IP	44
Weight		kg	1,2 to 1,6

CCBR 32

DC versions Description	Unit	–
Rated push load	N	2 500
Rated pull load	N	2 500
Stroke	mm	50 to 700
Retracted length	mm	S + 177
Ambient temperature	°C	–20 to +70
Weight	kg	1,1 to 1,5

CARN 32

DC versions Description	Unit	–
Rated push load	N	3 500
Rated pull load	N	3 500
Stroke	mm	50 to 700
Retracted length	mm	S + 218
Ambient temperature	°C	–20 to +70
Weight	kg	0,8 to 3,3

lmotion.ru sales@lmotion.ru Тел.: +7(499) 703-39-74

6.0 Installation

Only qualified personnel are allowed to install this equipment. Contact Ewellix for further information

⚠ WARNING

Do not exceed the actuator's load limits. Doing so can result in serious injury and/or property damage. For technical data on load limits, see section 5 below.

Fig. 1

Overview of front and rear attachment options

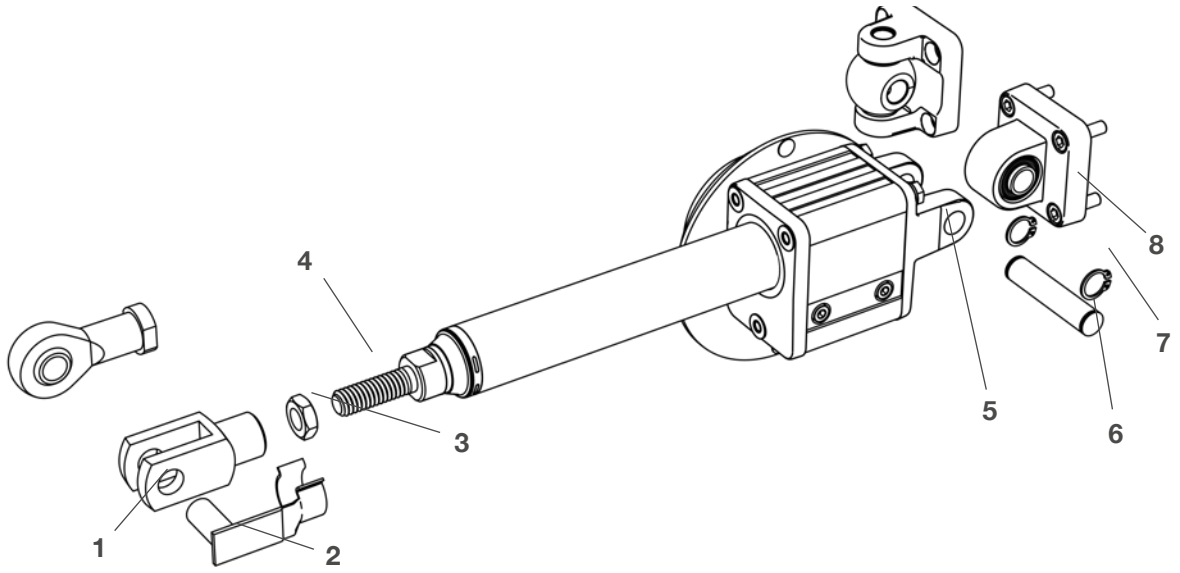

Description of the mechanical installation procedure.

1. Screw counter nut (**3**) onto the actuator front attachment (**4**)
2. Screw the front attachment (**1**, **2**) onto the actuator's front attachment (**4**), making sure that the engaged thread length is, at a minimum, 12 mm, which is the diameter of the thread.
3. Tighten the counter nut (**3**) onto the front attachment (**1**) with 20 Nm.
4. Disassemble pin (**2**) from front attachment (**1**).
5. Install the actuator onto the front and rear attachments. Mount the pin (**2**) onto the front attachment (**1**). Mount rod (**6**) with circlips (**7**) onto the rear attachments (**5**) and (**8**)

lmotion.ru sales@lmotion.ru Тел.: +7(499) 703-39-74

7.0 Wiring Diagrams

230 V AC

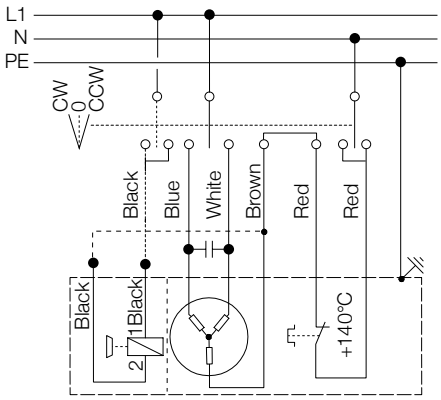

⚠ **WARNING**

- All electrical installation/maintenance should be carried out by qualified personnel.
- Isolate the power before installation or maintenance. Use the appropriate safety equipment when installing/repairing the equipment.
- When connecting this equipment to the electrical supply, make sure that it corresponds to the one described in the technical specifications.
- For complete installation instructions regarding Ewellix limit switch, see separate installation instructions.

24 V DC

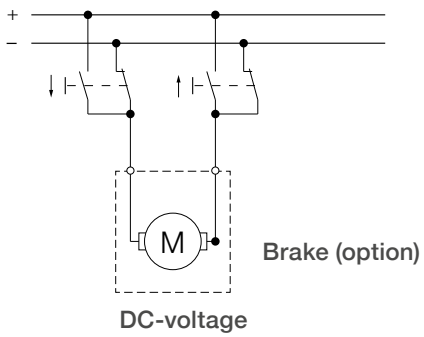

8.0 Maintenance

Interval	Maintenance work
Daily	Check actuator for visible damage
	Clean off dust and dirt if necessary
Monthly	Check attachments and tighten if necessary
	Check that cables are not damaged, replace if necessary
	Check optional equipment for visible damage, replace if necessary
	Functional check of operation
Every 6 months	A few drops of oil should be applied to the adjustment tube
Annually	Check labels
	Check electrical connections

Keep this information for future reference. Please contact your local Ewellix sales office if you need more information or spare parts.

Please check **www.ewellix.com** for relevant addresses.

lmotion.ru sales@lmotion.ru Тел.: +7(499) 703-39-74

9.0 Remaining risks

Regardless if the actuator has been installed according to this instruction some remaining risk excist.

Take note of these points during the lifespan of the actuator:

If any unnormal noise occure stop the actuator directly.

If the actuator has been subjected to excessive load, even for a short time, be aware of unnormal noise or ”wobbling movement”.

Do not operate the brake on its own when actuator is under load.

10.0 Destruction/waste

As majority of the actuator is made of steel and stainless steel some amount of grease/oil can be found inside. The motor and some assesories, like limit switch and encoder is considered electrical waste.

Check for local rules and information on how to despose the actuator and its parts.

Keep this information for future reference. Please contact your local Ewellix sales office if you need more information or spare parts.

Please check ewellix.com for relevant addresses.

lmotion.ru sales@lmotion.ru Тел.: +7(499) 703-39-74

ewellix.com

© Ewellix

All contents of this publication are the property of Ewellix, and may not be reproduced or given to third parties (even extracts) without permission. Although great care has been taken in the production of this catalog, Ewellix does not take any responsibility for damage or other loss resulting from omissions or typographical errors. The photo may differ slightly in appearance from the actual product. Due to continuous improvements being made in our products, the product's appearance and specifications are subject to change without notice.

PUB TC-08007-EN-March 2020